IWSSYSTEMS.COM
info@iwssystems.com

Flood & Drain

Set-Up Instructions

All Systems

Components	Detail
Control Unit with Timer	1 per system
Water Butt with Pipework	1 per system
Flexi Pipe	To connect the pots together and to the control unit
Elbows	6 per system
Tees	1 per additional pot when more than 6 pots are used

Setting Up Your System:

Set up your water butt using the supplied instructions. Connect the pipework from the butt to the control unit. Using hot water to soften the pipes will make this much easier.

Lay out your pots (and stands if supplied) in the position you want them to be in, remember to take into account the space required between pots for you plants to mature comfortably.

It is essential that your growing area is on even ground and the pots are level with one another and the control unit.

For **Standard** and **Standard Remote Systems** go to **page 2**

For **Pro Systems** go to **page 2**

For **Trident Systems** go to **page 3**

THE IWS FLOOD AND DRAIN SYSTEM IS DESIGNED TO BE USED ON A FLAT SURFACE TO ENSURE THAT ALL POTS RECEIVE THE SAME AMOUNT OF NUTRIENT SOLUTION PER FEED.

IWSSYSTEMS.COM
info@iwssystems.com

Flood & Drain
Set-Up Instructions

Standard & Standard Remote Only

Components	Detail
Outer Pots	Quantity to match the amount ordered
Inner Pots	1 per outer pot
Glands	1 per pot
Straights	6 per system (insert into the control unit and tighten the glands)
Copper Mat	1 per pot (remote only)
Pot Stands	1 per pot (remote, 10l pots only)

1. Removing the locknut and one of the washers from the gland, push the thread of the gland through from the outside of the outer pot.
2. Replace the washer and locknut on the inside of the outer pot and tighten. This can be nipped tight with a spanner to ensure a watertight seal.
3. Tighten the glands onto the elbow or tee fittings.
4. Once complete go to **All systems** on **page 3**

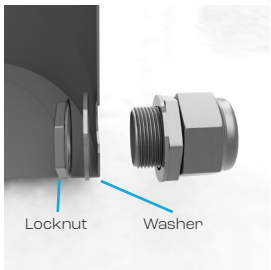

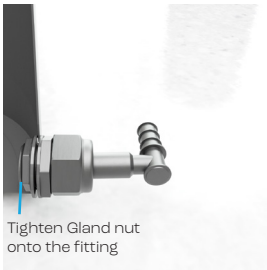

Pro System Only

Components	Detail
Outer Pots	Quantity to match the amount ordered
Washers	2 per pot
Locknut	1 per pot
Inner Pots	1 per outer pot
Copper Mat	1 per pot
Pot Stands	1 per pot (remote, 10l pots only)

1. Place one washer over the threaded end of the fitting (tee or elbow.) Push the threaded end of the fitting through the outer pot from the outside. Place another washer over the threads of the fitting inside the outer pot and fix with the locknut. Tighten the fitting with a spanner to create a watertight seal.
2. With just 6 pots, only the elbows are required. If using more than 6 pots, use the tees to create 6 continuous lines of pots with an equal number per line.
3. Once complete go to **All systems** on **page 3**

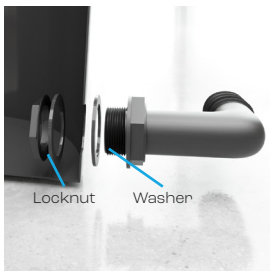

IWSSYSTEMS.COM
info@iwssystems.com

Flood & Drain

Set-Up Instructions

Trident System Only

Components	Detail
Trident Pots	Quantity to match the amount ordered
Cloth Pots	1 per pot
Trident Grommet	Seals a fitting to the pot
Lube	1 pack per system

1. Squash the grommet and insert the grommet into the Trident pot.
2. Apply a small amount of lube onto the fitting and push the fitting into the grommet.
3. With just 6 pots, only the elbows are required. If using more than 6 pots, use the tees to create 6 continuous lines of pots with an equal number per line.

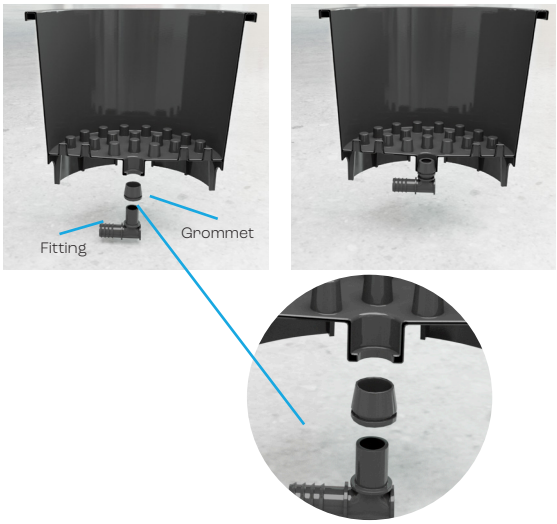

All Systems

Cut your pipework to the required lengths and connect the pots together in six lines and connect each line to the control unit. Heating the ends of the pipes with hot water will make this much easier. Ensure the pipework is as straight and level as possible.

IWSSYSTEMS.COM
info@iwssystems.com

Flood & Drain
Timer Instructions

About Segmental Timers

All Flood and Drain Systems have a segmental timer. Turn the outer dial clockwise to set the time. You can then set the time you want your feed to occur by pushing the segments outwards. The switch, can be set to 'I' which bypasses the timer and turns it on, '0' bypasses the timer and turns the system off, And the ◷ turns the system on at the time the segments are pushed out.

Setting Your Standard Timer

The standard timer is mounted to the control unit. It has a similar timer to the remote version, but is restricted to feeding in 15min intervals.

Ensure the timer switch is set to the middle position ◷ and push out the relevant number of sequential segments of the timer, for the desired feed time. For example a 30 minute feed at 2pm would require two segments pushed out one at 14.00 and 14.15.

Standard Timer

Setting Your Remote Timer

Ensure the timer switch is set to the middle position ◷ and push out one segment of the timer, for the desired start time of the feeds.

Turn the dial (1) to set the duration of your feeds.

Remote Timer

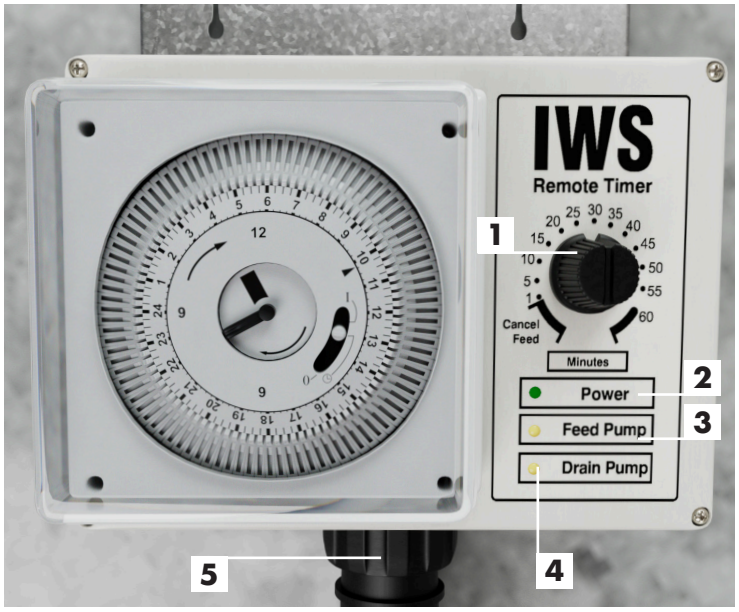

Additional Timer Functions

1. Dial – Set your desired feed duration from 1– 60 minutes with the option of cancelling the feed at any time.
2. Power LED – Illuminates when the system is 'on'.
3. Feed Pump LED – Illuminates when the system is 'flooding'.
4. Drain LED – Illuminates when the system is 'draining'.
5. Connection cable to the control pot (brain).